DocuSign Envelope ID: BFD79891-886A-40F5-81BD-75F2059AD3B3

WSP
434 Fayetteville Street Suite 1500
Raleigh, NC 27601 - 919.836.4040
LICENSE NO. F-0165

PROJECT REFERENCE NO.	SHEET NO.
17BP.14.R.79	2
R/W SHEET NO.	

ROADWAY DESIGN ENGINEER

NORTH CAROLINA PROFESSIONAL SEAL 33290 ENGINEER RONYELL A THIRPEN

DocuSigned by: Ronyell Thirpen 12/15/2018
9C2B4[illegible]

DOCUMENT NOT CONSIDERED FINAL UNLESS ALL SIGNATURES COMPLETED

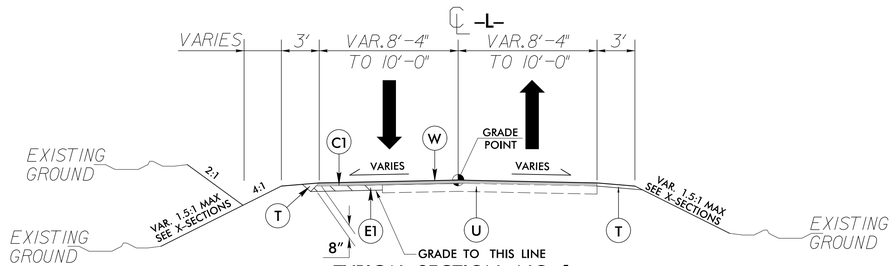

TYPICAL SECTION NO. 1
(USE IN CONJUNCTION WITH DETAIL A)
–L– STA. 10+25.00 TO STA. 11+18.00
–L– STA. 11+98.00 TO 13+00.00

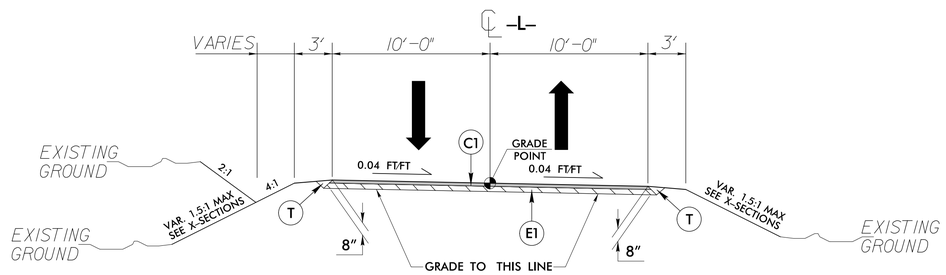

TYPICAL SECTION NO. 2
(USE IN CONJUNCTION WITH DETAIL A)
–L– STA. 11+18.00 TO STA. 11+98.00

PAVEMENT SCHEDULE

C1	PROP. APPROX. 3″ ASPHALT CONCRETE SURFACE COURSE, TYPE S9.5B, AT AN AVERAGE RATE OF 165 LBS. PER SQ. YD. IN EACH OF TWO LAYERS.
C2	PROP. VAR. DEPTH ASPHALT CONCRETE SURFACE COURSE, TYPE S9.5B, AT AN AVERAGE RATE OF 110 LBS. PER SQ. YD. PER 1″ DEPTH TO BE PLACED IN LAYERS NOT LESS THAN 1″ IN DEPTH OR GREATER THAN 1½″ IN DEPTH.
E1	PROP. APPROX. 5″ ASPHALT CONCRETE BASE COURSE, TYPE B25.0C, AT AN AVERAGE RATE OF 570 LBS. PER SQ. YD.
E2	PROP. VAR. DEPTH ASPHALT CONCRETE BASE COURSE, TYPE B25.0C, AT AN AVERAGE RATE OF 114 LBS. PER SQ. YD. PER 1″ DEPTH TO BE PLACED IN LAYERS NOT LESS THAN 3″ IN DEPTH OR GREATER THAN 5½″ IN DEPTH.
J	PROP. 8″ AGGREGATE BASE COURSE.
T	EARTH MATERIAL.
U	EXISTING PAVEMENT.
W1	WEDGING (SEE DETAIL THIS SHEET).

NOTES:
1. ALL SLOPES ARE 1:1 UNLESS OTHERWISE NOTED.

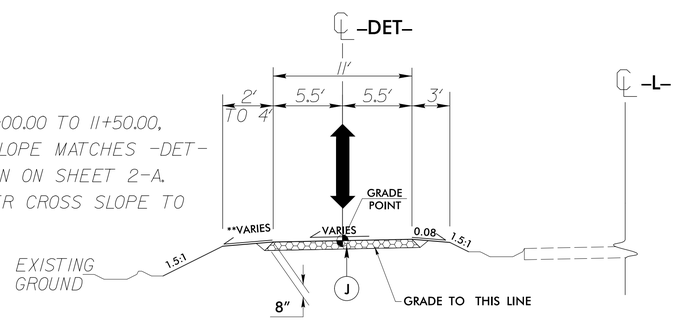

TYPICAL SECTION NO. 3
IN CONJUNCTION WITH TMP-2
–DET– STA. 10+70.14 TO STA. 12+12.17

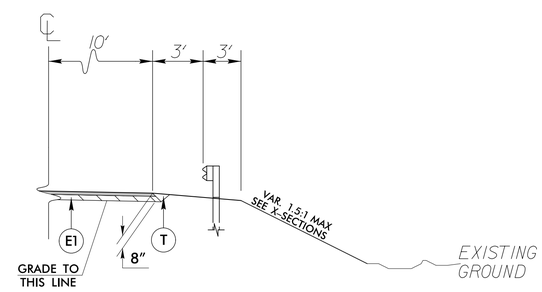

DETAIL A
GUARDRAIL
–L– STA. 11+07.69 TO STA. 12+74.02 (LT)
–L– STA. 10+49.62 TO STA. 12+03.44 (RT)

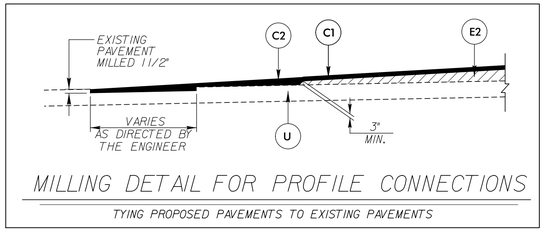

MILLING DETAIL FOR PROFILE CONNECTIONS
TYING PROPOSED PAVEMENTS TO EXISTING PAVEMENTS

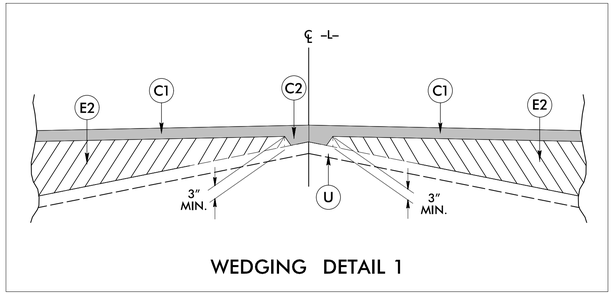

WEDGING DETAIL 1

REVISIONS

8/17/99

12/13/2018
R:\17BP.14.R.79_370087\Roadway\Proj\17BP.14.R.79_RDY_TYP.dgn
USER: 84167